HOSHIZAKI

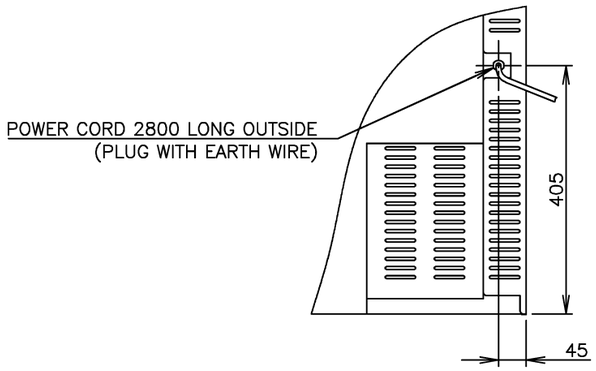

VIEW A

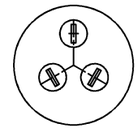

PLUG SHAPE

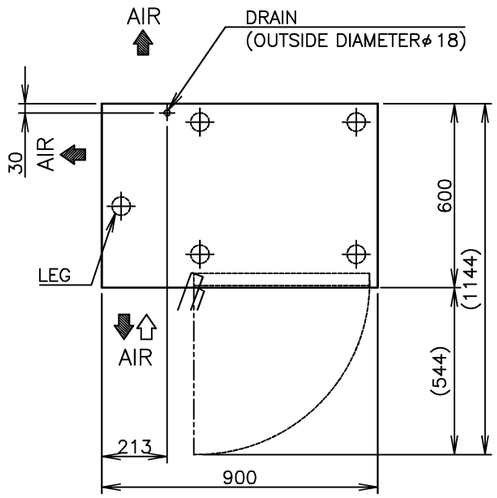

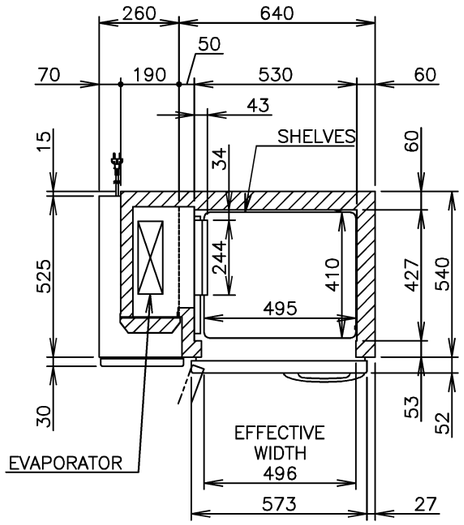

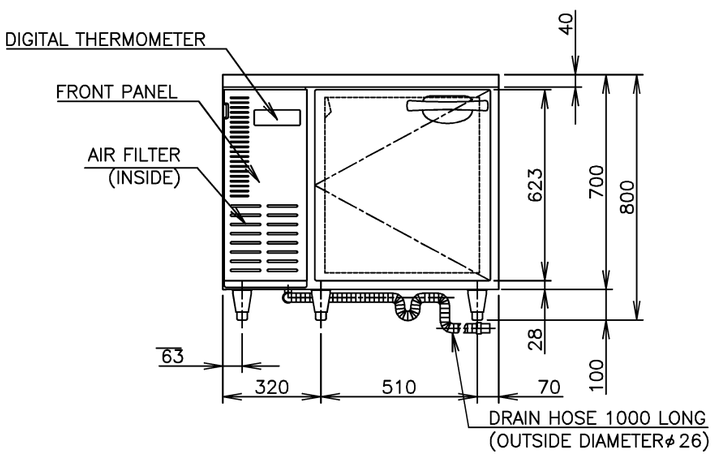

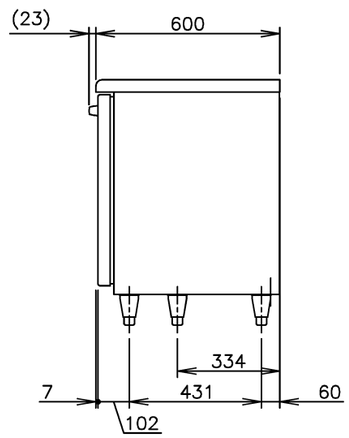

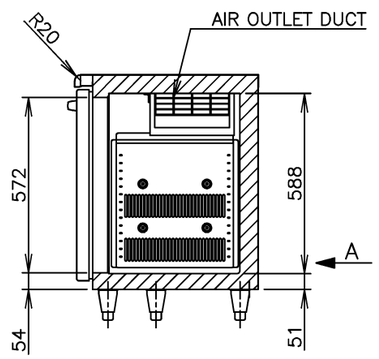

	ITEM	Hoshizaki Undercounter Refrigerator
	MODEL	RTC−90SNA
2	POWER SUPPLY	1 Phase 220V~ 50Hz Capacity: 0.30kVA(1.36A)
	AMPERAGE	Rated 1.2A Starting 6.8A
2	ELECTRIC CONSUMPTION	169W Heater 175W Defrost 165W
	HEAT REJECTION	310W
	POWER CORD	2.8m (Plug with Earth Wire)
2	EFFECTIVE CAPACITY	122L
	OUTSIDE DIMENSIONS	900mm (W) x 600mm (D) x 800 (790 − 830) mm (H)
	INSIDE DIMENSIONS	530mm (W) x 427mm (D) x 588mm (H)
	EXTERIOR	Stainless Steel, Galvanized Steel (Rear/Bottom)
	INTERIOR	Stainless Steel, ABS Plastic
	INSULATION	Polyurethane Foam
	INSULATION FOAM BLOWING AGENT	Cyclopentane
	REFRIGERATION SYSTEM	Forced Air Circulation
	DEFROST SYSTEM	Glass Tube Heater
2	COMPRESSOR	Hermetic
	CONDENSER	Fin and Tube type, Air−cooled
	EVAPORATOR	Fin and Tube Type
	REFRIGERANT	R134a/160g
	TEMPERATURE CONTROL	Microprocessor controlled (Digital Temp Indication) Adjustable from −6 to 12° C
	DEFROST CONTROL	Microprocessor controlled
	ELECTRIC CIRCUIT PROTECTION	Fuse, Earth Wire
	COMPRESSOR PROTECTION	Motor Protector
2	LEG	Plastic Adjustable 90 − 120mm
	SHELF	2pcs.
2	WEIGHT	Net: 58kg (Gross: Approx. 70kg)
	PACKAGE	Carton 965mm (W) x 680mm (D) x 790mm (H)
	ACCESSORIES	Drain Hose (⌀26mm OD), Cable strap x 3
	OPERATING CONDITIONS	Ambient Temperature: 5−43° C Voltage Range:Rated Voltage±6%

*We reserve the right to make changes in specifications and design without prior notice.

1. Install the product properly in accordance with the instructions on location, electrical connections stated in the instruction manual provided.
   Allow 10mm extra space at the installation site to meet any installation requirements(additional spacing is also required for proper air flow and pipe connections).
2. The heat rejection is based on the reached pulldown temperature at ambient temperature of 43° C and power supply of 220V 50Hz.
   The amperage and electric consumption are based on measurements at ambient temperature of 43° C and power supply of 220V 50Hz.
3. The cabinet temperature range of −6 to 12° C is guaranteed at ambient temperature of 30° C.
4. Product code: T015−D024

HOSHIZAKI UNDERCOUNTER REFRIGERATOR RTC−90SNA

APPROVED	CHECKED	DESIGNED	DRAWN	SCALE	
TORIHATA	YAMASAKI	KAWAKAMI	NISHIKOORI	1/20	TRIGONOMETRY
NAGASE	WANGQY	2	2020.06.08	DATE	DRAWING NO.	SYMBOL
APPROVED	DESIGNED	SYMBOL	DATE	2014.05.15	D13838	2

000520
施行